colortechnik
Antriebstechnik GmbH

SERVEX FYD Series

BRUSHLESS DC MOTORS & SPEED CONTROL DRIVERS

SERVO

BRUSHLESS DC MOTOR & SPEED CONTROL DRIVERS

In this series, motors and drivers are sold separately.
Please indicate the model type of each product.

FYD Series

DC24V

■Distinguishing Features

1. Motors are designed in Flat shape and in light weight
   - A special magnetic circuit design was employed newly. By this design, these motors are in Flat shape, and in lighter weight than conventional standard AC motors.
   - This series have 61mm sq.(2.4 in sq.), 80 mm sq.(3.1 in sq.), 90 mm sq.(3.5 in sq.) Flange sizes.
2. Compact designed Driver
   - "Palm Mini PLUS" Type is the smallest. (for 6W - 40W)
   - "Simple" Type is a driver of components mounted on a PCB. (for 6W - 15W)
   - "High power Simple" Type Low-cost circuit-board type driver. (25W, 40W)
3. Wide Ranged Speed Control
   - Wide range (200r/min - 2500r/min), stepless speed control. "High power Simple" Type. (200r/min - 2000r/min)
   - Very steady characteristics (Feed back control employed).
4. Speed pulse output
   - Speed pulse output can be used for speed monitoring, simplified position control...
   - "Palm Mini PLUS" Type : 30ppr
   - "Simple" "High power Simple" Type : 5ppr dual signal (120˚ shiftec)
5. Direction of rotation signal output
   - Direction of rotation can be monitored by this signal. ("Simple" type needs an external circuit.)
6. Alarming
   - At an over-load condition, the motor stops and an alarm signal is output.
7. Gear Head
   - Low-cost gear head for FY series is also available.
8. Rotor Cover (option) available
   An aluminum heat sink (size: 200mm x 200mm, thickness: 2mm or more) is required.

■Model Code

Model on motor FY **8** **PF** **25** H - D3
① ② ③ ④ ⑤ ⑥

①Series name
②Motor flange dimensions
6 : 61×61mm (2.4×2.4 in.)
8 : 80×80mm (3.1×3.1 in.)
9 : 90×90mm (3.5×3.5 in.)
③Motor output shaft type
S : plain shaft
PF : Pinion shaft
④Motor output
6 : 6W
15 : 15W
25 : 25W
40 : 40W
⑤Driver type
N : Normal
H : High power simple type driver
⑥Power supply voltage
D3 : DC24V

Model on driver FYD 8 25 H D3
① ② ③ ④ ⑤

①Series name
②Adapting motor flange dimensions
6 : 61×61mm (2.4×2.4 in.)
8 : 80×80mm (3.1×3.1 in.)
9 : 90×90mm (3.5×3.5 in.)
③Motor output
6 : 6W
15 : 15W
25 : 25W
40 : 40W
④Driver type
P : Palm mini PLUS type driver
S : Simple type driver
H : High power simple type driver
⑤Power supply voltage
D3 : DC24V

Palm mini PLUS type

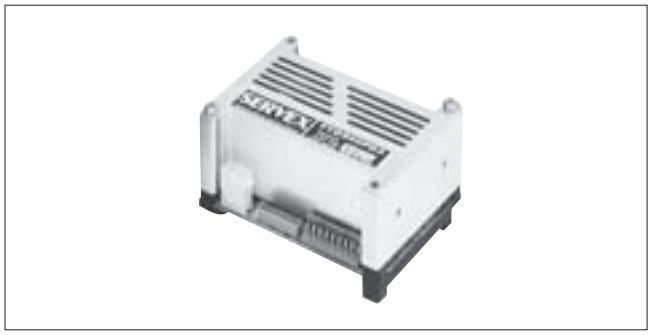

■Specification

Model on motor	plain shaft type		FY6S6-D3	FY8S15-D3	FY8S25-D3	FY9S40-D3
	Pinion shaft type		FY6PF6N-D3	FY8PF15N-D3	FY8PF25N-D3	FY9PF40N-D3
Model on driver			FYD66PD3	FYD815PD3	FYD825PD3	FYD940PD3
Rated voltage		V(DC)	24	24	24	24
Rated output		W	6	15	25	40
Speed control range		r/min	200~2500	200~2500	200~2300	200~2000
Rated torque		mN • m	39	98	157	250
		oz • in	5.6	14	22	36
MAX. instantaneous torque 5sec		mN • m	59(1500r/min MAX.)	150(1500r/min MAX.)	200(1500r/min MAX.)	300(600r/min MAX.)
		oz • in	8.3(1500r/min MAX.)	21(1500r/min MAX.)	28(1500r/min MAX.)	43(600r/min MAX.)
Rated speed		r/min	1500	1500	1500	1500
Speed setting method			①Speed setting by external speed setter(Sold separately : model code Q-R10KB)			
			②Speed setting by external voltage supply 0~10V			
Speed setting		(r/min)/V	300±5%			
Speed variation			Against load ±1% 0~rated torque at rated voltage and speed			
			Against voltage ±1% DC24V±10% at rated speed, no load			
			Against temperature ±3% 20±20˚C at rated voltage and speed, no load			
Input and output signal		Input	RUN, BRAKE, F/R IN H : Open collector L : GND(0~0.8V)			
		Output	ALARM, SPEED OUT(PULSE OUTPUT), F/R OUT H : Open collector DC30V MAX. L : 0~0.8V 10mA MAX.			
Speed pulse		Pulse/Rotation	30	30	30	30
Current	Rated (Ave.)	A	0.7 MAX.	1.4 MAX.	2.3 MAX.	3.4 MAX.
	MAX. (Peak)		4.2 MAX.	6.6 MAX.	10 MAX.	10 MAX.
Protection			Over load protection When an exceeding torque than rated is applied to motor for more than about 5sec. Stop motor and output "L" from "ALARM".In disconnect power supply for more than 1min, In case of alarm reless.			
Others			Operation temperature 0~40˚C(no condensation) continuous duty. The motor flange surfase temp must be 80˚C MAX. (Ambient temperature 40˚C without heat sink) Motor dielectric strength Withstad for 1min. under AC500V 50Hz (Between case and coil) Motor insulation resistance 10MΩMIN. (Between case and coil DC500V tester)			

Gear ratio	Speed(r/min)		Applicable MAX. Torque for gearheads							
	at 200r/min	at 1500r/min	6H□FBN-100		8H□FBN-100		8H□FBN-100		9H□FBN-100	
			mN • m	oz • in	mN • m	oz • in	mN • m	oz • in	mN • m	oz • in
5	40	300	160	22	390	56	640	83	980	140
15	14	100	470	67	1200	170	1900	260	3000	430
25	8	60	720	100	1800	250	2800	400	4600	650
30	6.7	50	850	120	2100	290	3400	490	5500	780
50	4	30	1400	190	3100	440	5100	720	8300	1200

- ▭: rotation of gear head output shaft becomes reverse direction of motor's.
- Although the rotation speed range in the high-speed area expands more than that shown in the above table, the allowable torque may decrease. Refer to the torque rotation speed graph.

BRUSHLESS DC MOTOR & SPEED CONTROL DRIVERS

FYD Series

DC24V

■Torque-speed/Current (TYP.) characteristics

(FY6S6-D3+FYD66PD3)

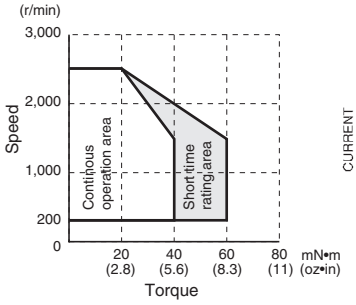

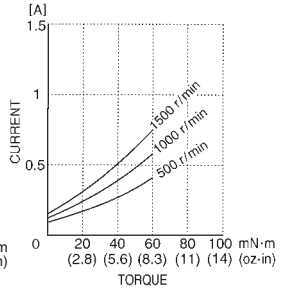

(FY8S15-D3+FYD815PD3)

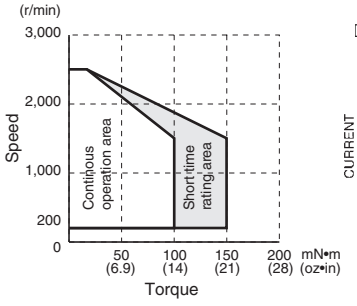

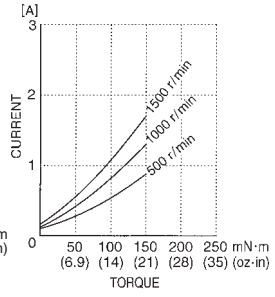

(FY8S25-D3+FYD825PD3)

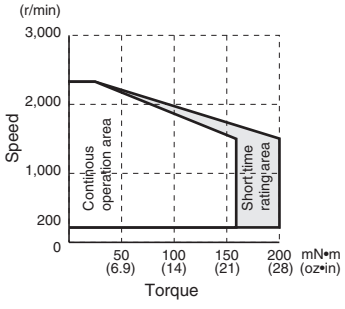

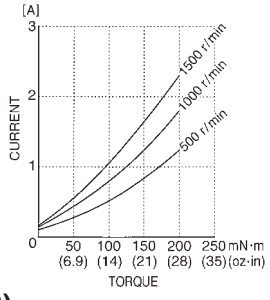

(FY9S40-D3+FYD940PD3)

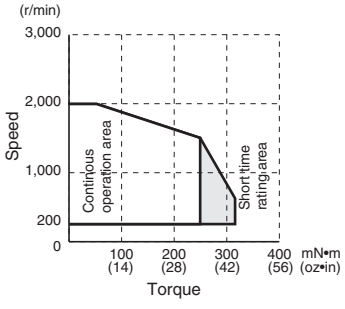

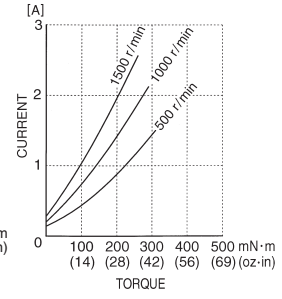

■Motor outlines(Plain shaft type)

Unit : mm (inch)

FY6S6-D3

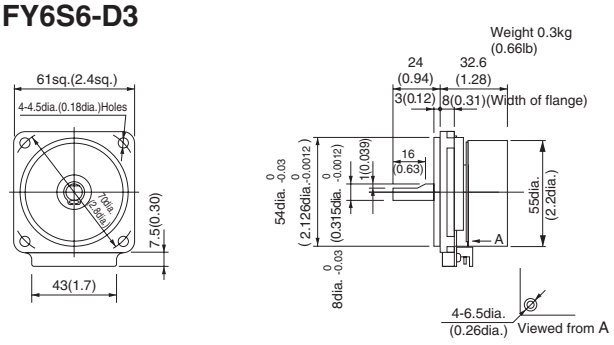

FY8S15-D3

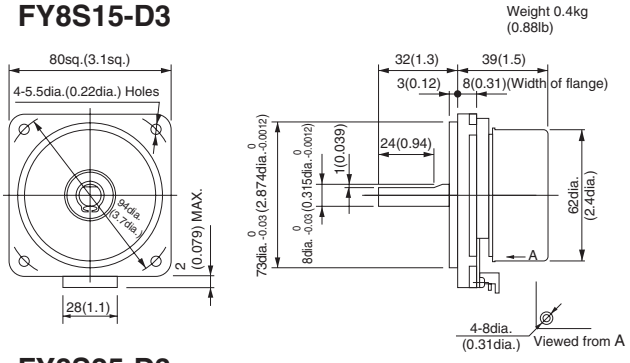

FY8S25-D3

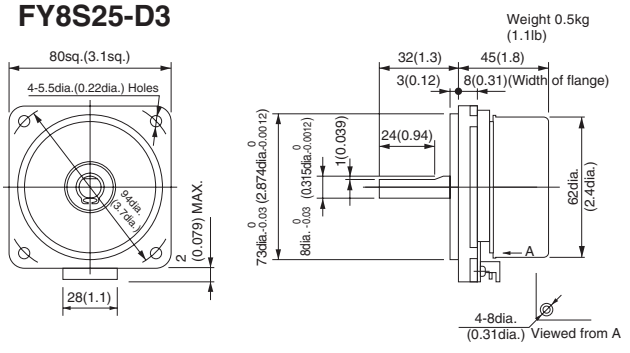

FY9S40-D3

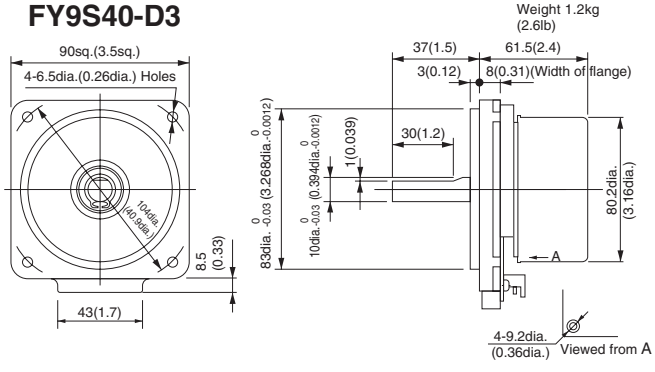

■Motor (Pinion shaft type)+ Gear head outlines

Unit : mm (inch)

FY6PF6N-D3+ 6H□FBN-100

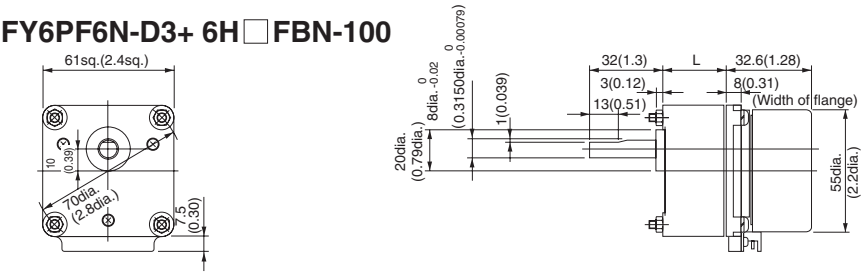

L(Gear head length)•Weight•Screw(Accessory)

Gear ratio	Lmm(in.)	Weight Kg(lb)	Screw
1/5~1/15	32(1.3)	0.4(0.88)	M4X50(2.0)
1/25~1/50	42(1.7)	0.4(0.88)	M4X60(2.4)

FY8PF15N-D3+ 8H□FBN-100

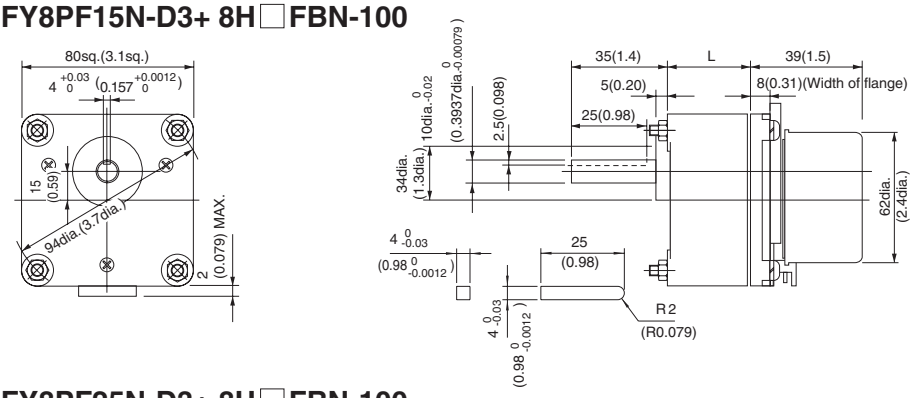

L(Gear head length)•Weight•Screw(Accessory)

Gear ratio	Lmm(in.)	Weight Kg(lb)	Screw
1/5~1/15	30(1.2)	0.5(1.1)	M5X50(2)
1/25~1/50	40(1.6)	0.6(1.3)	M5X60(2.4)

FY8PF25N-D3+ 8H□FBN-100

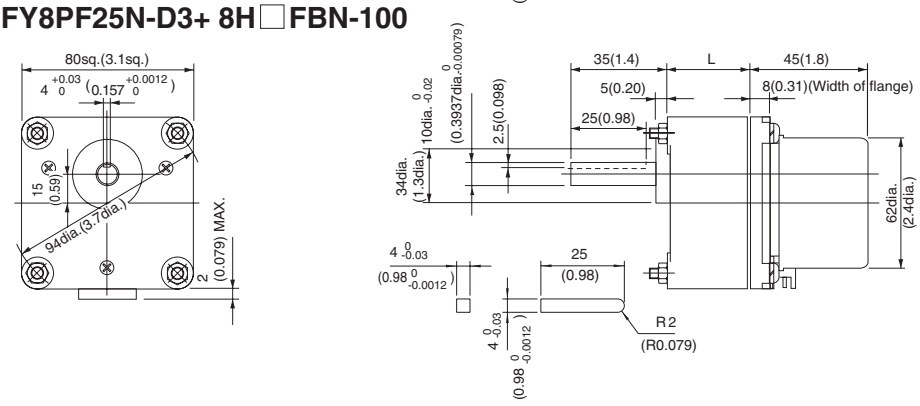

L(Gear head length)•Weight•Screw(Accessory)

Gear ratio	Lmm(in.)	Weight Kg(lb)	Screw
1/5~1/15	30(1.2)	0.5(1.1)	M5X50(2)
1/25~1/50	40(1.6)	0.6(1.3)	M5X60(2.4)

FY9PF40N-D3+ 9H□FBN-100

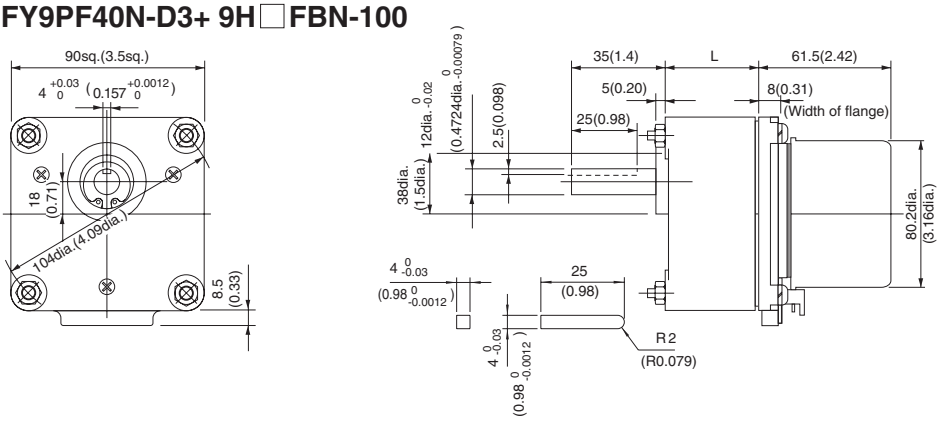

L(Gear head length)•Weight•Screw(Accessory)

Gear ratio	Lmm(in.)	Weight Kg(lb)	Screw
1/5~1/15	42(1.7)	0.8(1.8)	M6X50(2.4)
1/25~1/50	60(2.4)	0.9(2.0)	M6X60(3.1)

NOTE

For prevention of oil leaking, combination use a packing (rubber) sold separately between gear head and motor.

Model on packing(rubber)
6H□FBN : H6packing(rubber)
8H□FBN : H8packing(rubber)
9H□FBN : H9packing(rubber)

■Input & output terminals and wiring diagram

Item	Pin No.	Symbol	Input or Output	Function	Standard • Condition
Power supply	1	VM	Input	Power supply positive for driver	DV24V±10%
	2	P.GND	–	Power supply GND for driver	
I/O	1	SPEED OUT	Output	30 Pulse/Revolution *3	*1 H : Open collector DC30V MAX. L : 0~0.8V 10mA MAX.
	2	F/R OUT	Output	H : CCW L : CW (Viewed from motor output shaft end)	
	3	VR	Output	Power supply positive for external speed setter	
	4	VS	Input	Speed setting signal positive	0~10V
	5	GND	–	Speed setting signal GND	
	6	GND	–	GND for I/O Signal	
	7	ALARM	Output	H : Normal operation L : Protective function operates	Same as *1
	8	F/R IN	Input	H : CCW L : CW (Viewed from motor output shaft side)	*2 H : Open collector L : 0~0.8V
	9	BRAKE	Input	H : Brake releases L : Brake operates	H : Open collector L : 0~0.8V During the operation of "BRAKE", "RUN" signal shoud be "L".
	10	RUN	Input	H : Motor stops L : Motor rotates	Same as *2

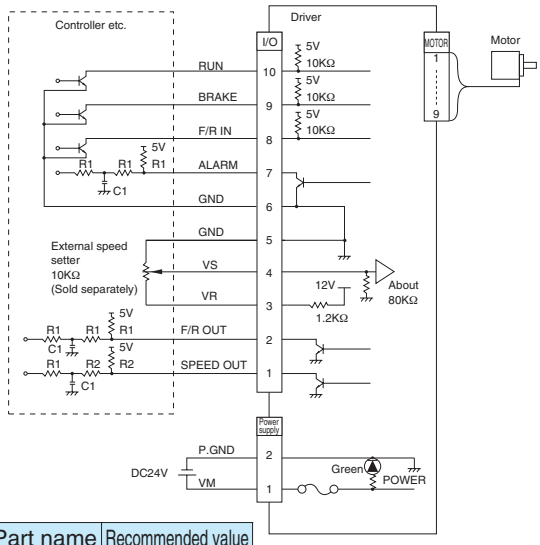

Part name	Recommended value
R1	4.7KΩ
R2	1KΩ
C1	0.01μF

*3 "SPEED OUT" signal is shown below.

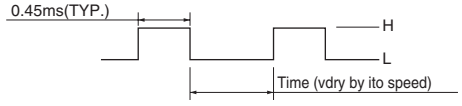

When input signal is H, input signals (RUN, BRAKE, F/R IN) should be input by open collector. If 5V is input, it will become the cause of wrong operation.
Noise of output signals (ALARM, F/R OUT, SPEED OUT) should be removed by a filter as shown in figure above.
Setting of filter constant should be done by confirming the noise level vefering to the recommended constant.
At this time, be careful that signal delays if the values of resistance and/or capacitor are big though it becomes better to kill noise.
Specially, for speed out, setting should be done with attention to filter constant because pulse width is narrow.

■Control sequence

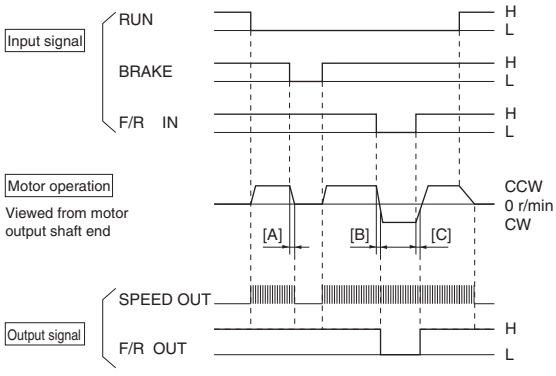

[Notes for BRAKE Operation & Rotation change]
(1)During the brake is operating (period [A] left]. to change direction of rotation, switch signal of "F/R IN", only after the brake signal was changed to non*operational condition ("L"→"H").
(2)During the direction of rotation changing (period [B] & [C] left), you need the brake to operate, let it operate only when the both direction of rotation setting signal ("F/R IN") and direction monitor signal ("F/R OUT") is the same,
(3)When actual motor speed is higher than the setting (by signal input value of (VS)), any of signal switching on "F/R IN" and BRAKE ("H"→"L") must not be made.
(4)During the brake is operating set the "RUN" signal at "L" all the time.
WARNING:
Notes above must be following without fail, and reminded all the time. But if not follow to (1), (2) & (4), it may cause abnormal/dangerous motor operation, and not follow to (3), it may cause FIRE or system damage.
Electrical shock : By the load condition, the terminal voltage (VM) is raised up to 30 VDC, during switching BRAKE and/or Rotation direction.
(Braking Operation : At higher speed : reverse rotation brake first, then short circuit brake. But at slower speed : short circuit brake only.)
[Notes on "F/R OUT"]
During the motor is in stop, the "F/R OUT" is held at the same signal as previously outputting. This means ; if the motor stopped once, but the rotation reversed by Cogging torque or by the Load, then the "F/R OUT" is held at reversed signal. Also note that "F/R OUT" signal will delay by 0~5pulses of "SPEED OUT" from the motor rotation switched.

■Speed setting

Fig.1 Speed setting by external speed setter

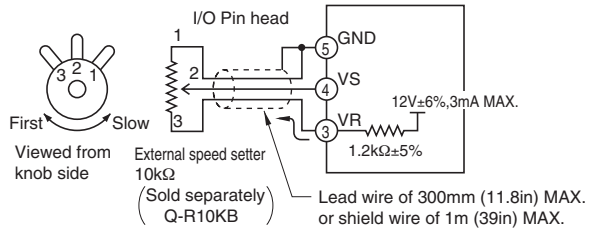

Fig.2 Speed setting by external voltage supply

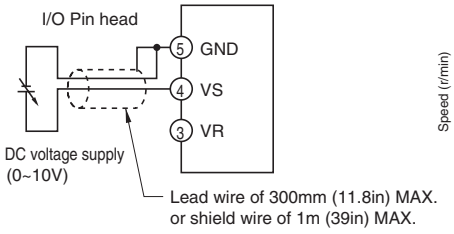

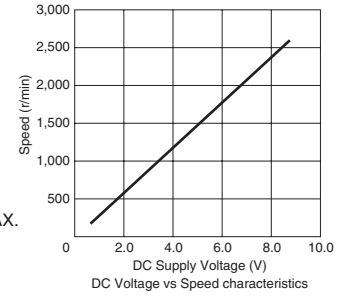

DC Voltage vs Speed characteristics

Item	Setting Method
Speed setting by external speed setter (sold separately)	Connect as shown in Fig.1 and set by external speed setter. Use variable resistor 10[KΩ] as external speed setter.
Speed setting by external voltage supply	Connect as shown in Fig.2 and set speed by external voltage supply.

By these mothed, it is possible to set a speed at outside of Speed range. But it must be out of aur product warranty.

■Protection

Item	Protection		Alarm Release
	Setting	Action	
Overload Protection	When the load exceeding rated torque is applied to motor for more than about 5 sec.	Motor is stopped, and "ALARM" outputs "L".	Disconnect power supply for more than 1 minute.

Do not measure/judge by this operation whether the motor is overloaded or not.

■Driver outline

Unit : mm (inch)

FYD66PD3, FYD815PD3, FYD825PD3, FYD940PD3

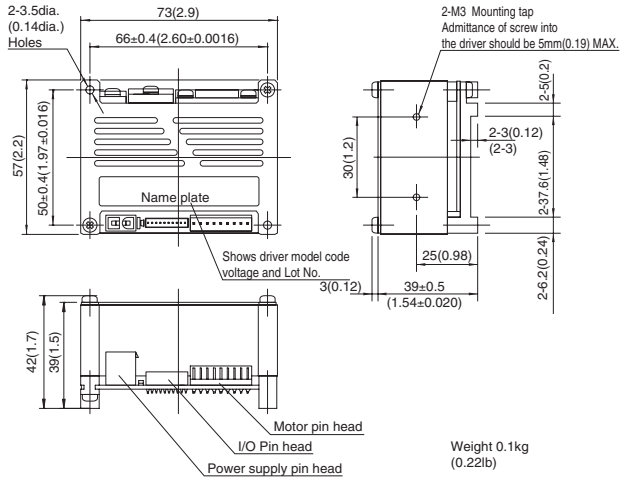

■Rotor cover (Sold separately)

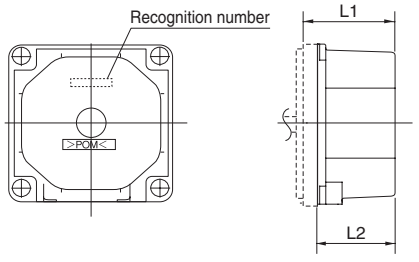

Model on rotor cover	L1mm (in)	L2mm (in)	Recognition number	Accessory washer nominal diameter	Adapting motor		
F-RC630	37 (1.5)	30.4 (1.20)	AD09877	M4	6W	Plain shaft type	FY6S6-D3
						Pinion shaft type	FY6PF6N-D3
F-RC837	43.5 (1.71)	37 (1.5)	AD09768	M5	15W	Plain shaft type	FY8S15-D3
						Pinion shaft type	FY8PF15N-D3
F-RC844	50 (2.0)	43.5 (1.71)	AD09904	M5	25W	Plain shaft type	FY8S25-D3
						Pinion shaft type	FY8PF25N-D3
F-RC961	67.5 (2.66)	61 (2.40)	AD09903	M6	40W	Plain shaft type	FY9S40-D3
						Pinion shaft type	FY9PF40N-D3

■Accessory

Unit : mm (inch)

I/O cable

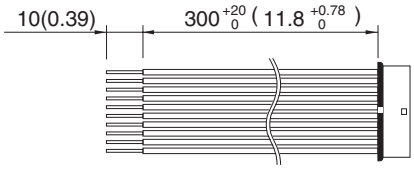

Connection guide

Pin No.	Name	Lead wire color	Lead wire
1	SPEED OUT	Brown	UL3265 AWG28
2	F/R OUT	Red	
3	VR	Orange	
4	VS	Yellow	
5	GND	Green	
6	GND	Blue	
7	ALARM	Purple	
8	F/R IN	Gray	
9	BRAKE	White	
10	RUN	Black	

Power supply cable

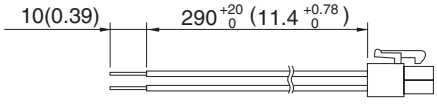

Connection guide

Pin No.	Name	Lead wire color	Lead wire
1	VM	Red	UL1430 AWG22
2	P. GND	Black	

Motor cable

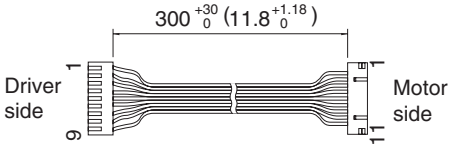

Connection guide

Motor side connector Pin No.	Driver side connector Pin No.	Name	Lead wire color	Lead wire
1	1	Coil U	Brown	UL1007 AWG24
2	–	–	–	–
3	2	Coil V	Red	UL1007 AWG24
4	–	–	–	–
5	3	Coil W	Orange	UL1007 AWG24
6	4	–	Yellow	
7	5	HW	Green	
8	6	HV	Blue	
9	7	HU	Purple	
10	8	GND	Gray	
11	9	12V	White	

■Connector model code

Item	Driver or motor side	Pin head model code on driver or motor	Connector model code on cable		Maker
			Housing	Contact (reel)	
I/O connection	Driver	IL-Y-10P-S15T2-EF	IL-Y-10S-S15C3	IL-Y-C3-A-10000	JAE
Power supply connection	Driver	5566-02A	5557-02R	5556T	MOLEX
Motor connection	Driver	IL-G-9P-S3T2-SA	IL-G-9S-S3C2-SA	IL-G-C2-SC-10000	JAE
	Motor	IL-G-11P-S3L2-SA	IL-G-11S-S3C2-SA	IL-G-C2-SC-10000	

■Motor/Driver/Cable/Rotor cover model code table Unit : mm (inch)

		Motor model code	Driver model code	Power supply cable model code	Motor cable model code	I/O Cable model code	Rotor cover model code
FYD series	Palm mini PLUS driver	FY6S6-D3	FYD66PD3	FED-CNSL03 300 (11.8)	FED-CNML03 300 (11.8)	FED-CNPL03 300 (11.8)	F-RC630
				FED-CNSL05 500 (19.7)	FED-CNML05 500 (19.7)	FED-CNPL05 500 (19.7)	
				FED-CNSL10 1000 (39.4)	FED-CNML10 1000 (39.4)	FED-CNPL10 1000 (39.4)	
		FY6PF6N-D3	FYD66PD3	FED-CNSL03 300 (11.8)	FED-CNML03 300 (11.8)	FED-CNPL03 300 (11.8)	F-RC630
				FED-CNSL05 500 (19.7)	FED-CNML05 500 (19.7)	FED-CNPL05 500 (19.7)	
				FED-CNSL10 1000 (39.4)	FED-CNML10 1000 (39.4)	FED-CNPL10 1000 (39.4)	
		FY8S15-D3	FYD815PD3	FED-CNSL03 300 (11.8)	FED-CNML03 300 (11.8)	FED-CNPL03 300 (11.8)	F-RC837
				FED-CNSL05 500 (19.7)	FED-CNML05 500 (19.7)	FED-CNPL05 500 (19.7)	
				FED-CNSL10 1000 (39.4)	FED-CNML10 1000 (39.4)	FED-CNPL10 1000 (39.4)	
		FY8PF15N-D3	FYD815PD3	FED-CNSL03 300 (11.8)	FED-CNML03 300 (11.8)	FED-CNPL03 300 (11.8)	F-RC837
				FED-CNSL05 500 (19.7)	FED-CNML05 500 (19.7)	FED-CNPL05 500 (19.7)	
				FED-CNSL10 1000 (39.4)	FED-CNML10 1000 (39.4)	FED-CNPL10 1000 (39.4)	
		FY8S25-D3	FYD825PD3	FED-CNSL03 300 (11.8)	FED-CNML03 300 (11.8)	FED-CNPL03 300 (11.8)	F-RC844
				FED-CNSL05 500 (19.7)	FED-CNML05 500 (19.7)	FED-CNPL05 500 (19.7)	
				FED-CNSL10 1000 (39.4)	FED-CNML10 1000 (39.4)	FED-CNPL10 1000 (39.4)	
		FY8PF25N-D3	FYD825PD3	FED-CNSL03 300 (11.8)	FED-CNML03 300 (11.8)	FED-CNPL03 300 (11.8)	F-RC844
				FED-CNSL05 500 (19.7)	FED-CNML05 500 (19.7)	FED-CNPL05 500 (19.7)	
				FED-CNSL10 1000 (39.4)	FED-CNML10 1000 (39.4)	FED-CNPL10 1000 (39.4)	
		FY9S40-D3	FYD940PD3	FED-CNSL03 300 (11.8)	FED-CNML03 300 (11.8)	FED-CNPL03 300 (11.8)	F-RC961
				FED-CNSL05 500 (19.7)	FED-CNML05 500 (19.7)	FED-CNPL05 500 (19.7)	
				FED-CNSL10 1000 (39.4)	FED-CNML10 1000 (39.4)	FED-CNPL10 1000 (39.4)	
		FY9PF40N-D3	FYD940PD3	FED-CNSL03 300 (11.8)	FED-CNML03 300 (11.8)	FED-CNPL03 300 (11.8)	F-RC961
				FED-CNSL05 500 (19.7)	FED-CNML05 500 (19.7)	FED-CNPL05 500 (19.7)	
				FED-CNSL10 1000 (39.4)	FED-CNML10 1000 (39.4)	FED-CNPL10 1000 (39.4)	

NOTE)Cable types for FYD series are the same as FED series, because they are used in commonly.

Simple type

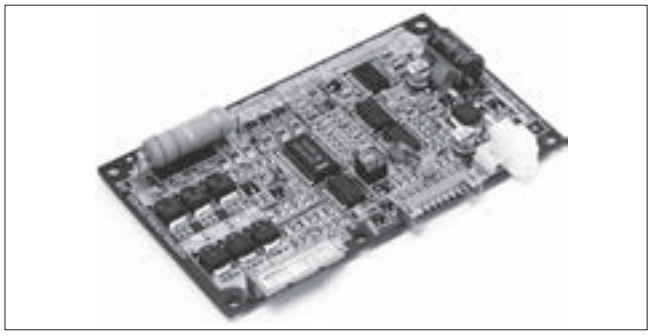

■Specification

Model on motor	Plain shaft type	FY6S6-D3	FY8S15-D3
	Pinion shaft type	FY6PF6N-D3	FY8PF15N-D3
Model on driver		FYD66SD3	FYD815SD3
Rated voltage	V(DC)	24	24
Rated output	W	6	15
Speed range	r/min	200~2500	200~2500
Rated torque	mN • m	39	98
	oz • in	5.6	14
Rated speed	r/min	1500	1500
Speed setting method		①Speed setting by external speed setter(Sold separately : Model code Q-R10KB)	
		②Speed setting by external voltage supply 0~10V	
Speed setting	(r/min)/V	300±5%	
Speed variation		Against load ±1% 0~rated rorque at rated voltage and speed	
		Against voltage ±1% DC24V±10% at rated speed, no load	
		Against temperature ±3% 20±20˚C at rated voltage and speed, no load	
Input and output signal	Input	RUN, BRAKE, F/R IN H : Open collector L : GND(0~0.8V)	
	Output	ALARM OUT, HU OUT, HV OUT H : Open collector DC30V MAX. L : 0~0.8V 10mA MAX.	
pulse rate	Pulse/Revolution	5	5
Current	Rated (Ave.) A	0.7 MAX.	1.4 MAX.
	MAX. (Peak) A	2.8 MAX.	5 MAX.
Protection		Over load protection When a load exceeding rated torque is applied to motor for more than about 5sec. Stop motor and output "L" from "ALARM" In case of alarm reless, disconnect power supply for more than 1min.	
Others		Operation temperature 0~40˚C(no condensation) continuous duty. The motor flange suface tempo must be 80˚C MAX. (Ambient temperature 40˚C without heat sink) Motor dielectric strength Withstad for 1min. under AC500V 50Hz(Between case and coil) Motor insulaition resistance 10MΩMIN. (Between case and coil DC500V tester.)	

Gear ratio	Speed(r/min)		Applicable MAX. Torque for gearheads			
			6H□FBN-100		8H□FBN-100	
	at 200r/min	at 1500r/min	mN • m	oz • In	mN • m	oz • In
5	40	300	160	22	390	56
15	14	100	470	67	1200	170
25	8	60	720	100	1800	250
30	6.7	50	850	120	2100	290
50	4	30	1400	190	3100	440

- ▭: rotation of gear head output shaft becomes reverse direction of motor's.
- Although the rotation speed range in the high-speed area expands more than that shown in the above table, the allowable torque may decrease. Refer to the torque rotation speed graph.

BRUSHLESS DC MOTOR & SPEED CONTROL DRIVERS

FYD Series

DC24V

■Torque-speed/Current (TYP.) characteristics

(FY6S6-D3+FYD66SD3)

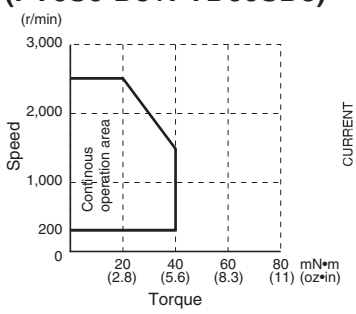

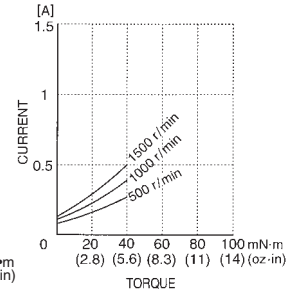

(FY8S15-D3+FYD815SD3)

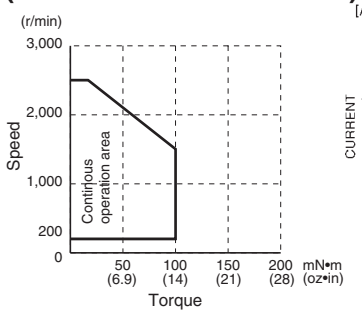

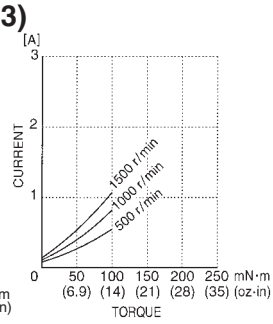

■Motor outlines(Plain shaft type)

Unit : mm (inch)

FY6S6-D3

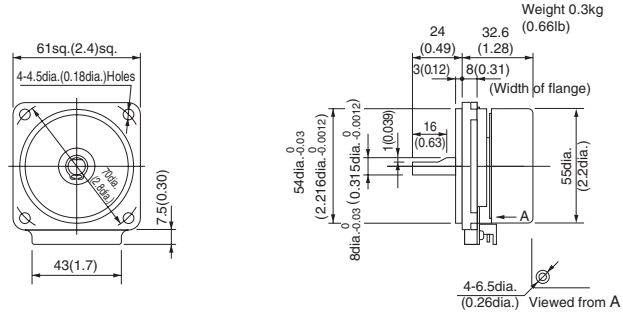

FY8S15-D3

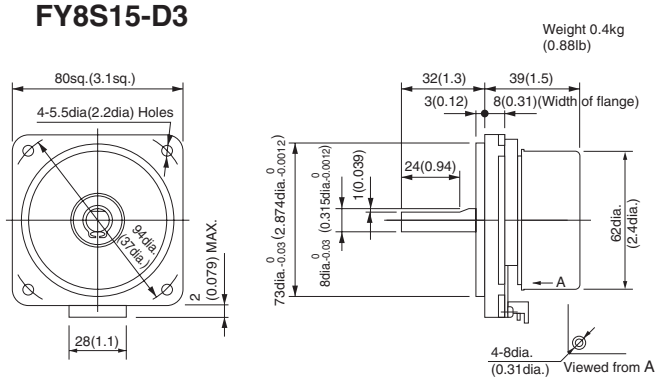

■Motor(Pinion shaft type)+gearhead outlines

FY6PF6N-D3+ 6H□FBN-100

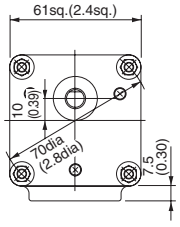

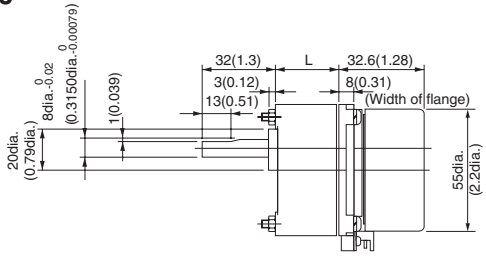

L(Gear head length)•Weight•Screw(Accessory)

Gear ratio	L mm(In.)	Weight Kg(lb)	Screw
1/5~1/15	32(1.3)	0.4(0.88)	M4X50(2.0)
1/25~1/50	42(1.7)	0.4(0.88)	M4X60(2.4)

FY8PF15N-D3 + 8H□FBN-100

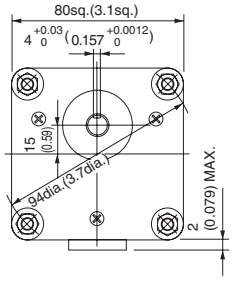

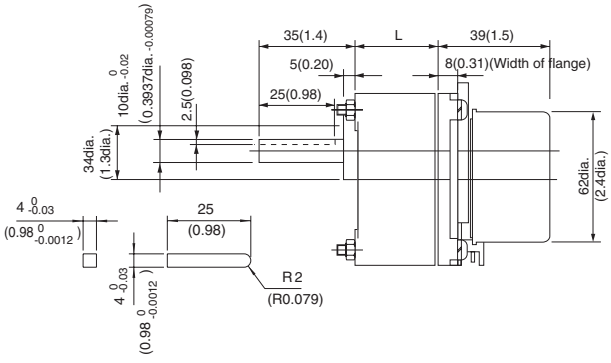

L(Gear head length)•Weight•Screw(Accessory)

Gear ratio	L mm(In.)	Weight Kg(lb)	Screw
1/5~1/15	30(1.2)	0.5(1.1)	M5X50(2)
1/25~1/50	40(1.6)	0.6(1.3)	M5X60(2.4)

■Input & output terminals and wiring diagram

Item	Pin No.	Symbol	Input or Output	Function	Standard • Condition
Power Supply	1	VM	Input	Power supply positive for drive	DC24V±10%
	2	P.GND	–	Power supply GND for driver	
I/O	1	HU OUT	Output	5 pulse/revolution (Hall signal) *1	H : Open collector DC30V MAX. L : 0~0.8V 10mA MAX.
	2	HV OUT	Output		
	3	ALARM OUT	Output	H : Normal operation L : Protective function operates	
	4	VR	Output	Power supply positive for external speed setter	
	5	VS	Input	Speed setting signal positive	0~10V
	6	GND	–	Speed setting signal GND	
	7	GND	–	GND for I/O signal	
	8	F/R IN	Input	H : CCW L : CW (Viewed from motor output shaft end)	H : Open collector L : 0~0.8V
	9	BRAKE	Input	H : Brake releases L : Brake operates	
	10	RUN	Input	H : Motor stops L : Motor rotates	

*1 "HU OUT" signal and "HV OUT" signal are shown below.
Motor rotation (viewed from motor output shaft end)

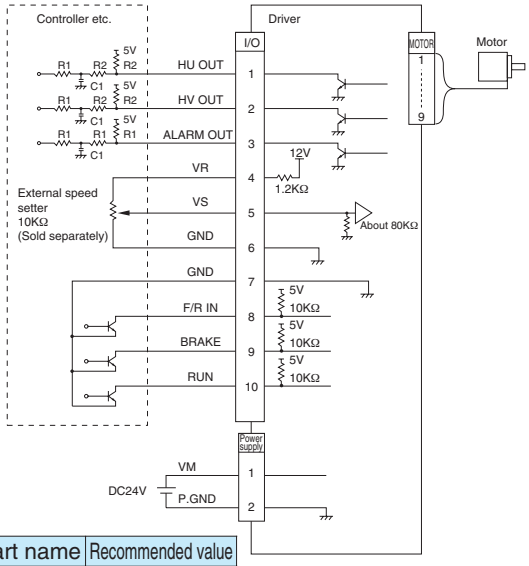

Part name	Recommended value
R1	4.7KΩ
R2	1KΩ
C1	0.01μF

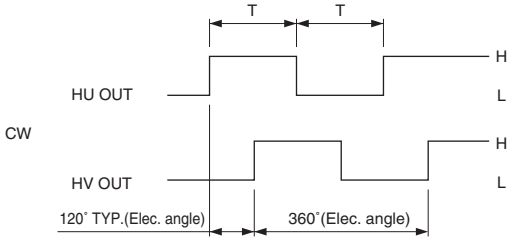

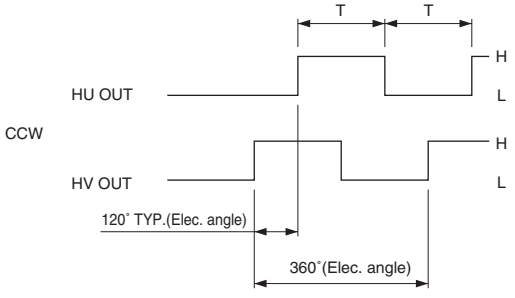

T : Time (vary by its speed)

When input signal is H, input signals (RUN, BRAKE, F/R IN) should be input by open collector. If 5V is input, it will become the cause of wrong operation.
Noise of output signals (ALARM OUT, HU OUT, HV OUT) should be removed by a filter as shown in fig.
Setting of filter constant should be done by confirming the noise level refering to the recommended constant.
At this time, be careful that signal delays if the values of resistance and/or capacitor are big though it becomes better to kill noise.
Specially, for HU OUT,HV OUT, setting should be done with attention to filter constant because pulse width is narrow.

■Control sequence

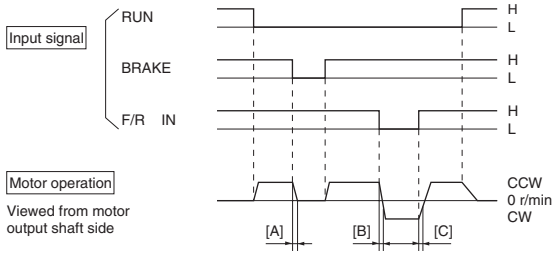

[Notes for "BRAKE" operation and during the rotation direction changing]
"BRAKE" (Above [A] period) should be operated, within the "SPEED CONTROL RANGE".
If it is used differently from above, it may cause fire of failure. Also, be careful that "VM" terminal voltage happens to rise up to about 30V according to the condition of use during the rotation direction changing (Above [B] and [C] periods).
(Brake operation : Short brake.)

■Speed setting

Fig.1 Speed setting by external speed setter

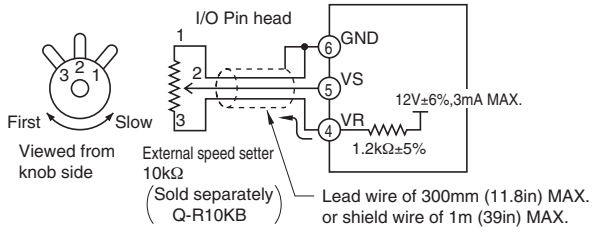

Fig.2 Speed setting by external voltage supply

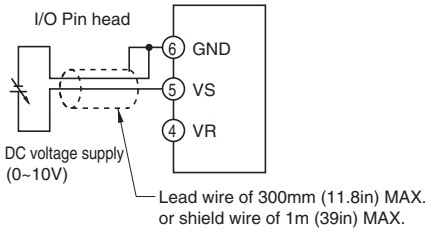

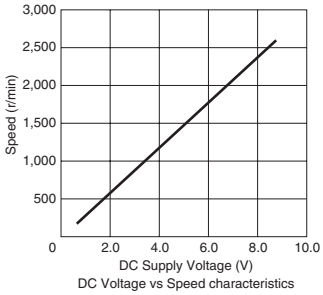

DC Voltage vs Speed characteristics

Item	Setting Method
Speed setting by external speed setter (sold separately)	Connect as shown in Fig.1 and set by external speed setter. Use variable resistor 10[KΩ] as external speed setter.
Speed setting by external voltage supply	Connect as shown in Fig.2 and set speed by external voltage supply.

By these mothed, it is possible to set a speed at outside of Speed rauge. But it must be out of our product warranty.

■Driver outline

Unit : mm (inch)

FYD66SD3, FYD815SD3

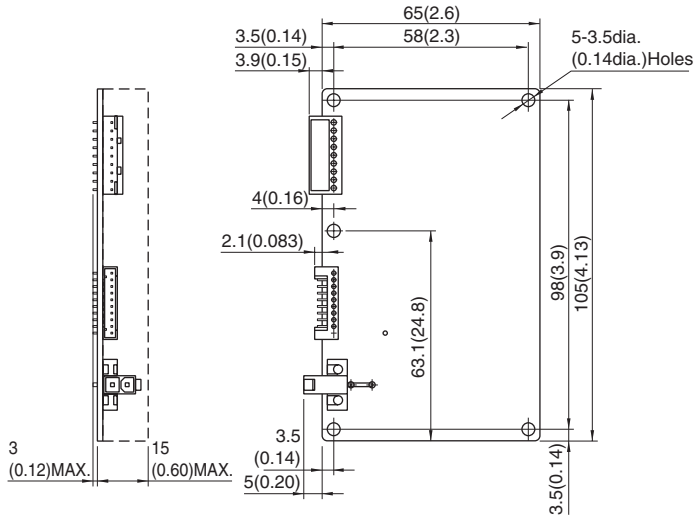

Weight 0.1kg
(0.22Lb)

■Protection

Item	Protection		Alarm Release
	Setting	Operation	
Overload Protection	When the load exceeding rated torque is applied to motor for more than about 5 sec.	Motor is stepped and "ALARM" outputs "L"	Disconnect power supply for more than 1 minute.

Do not measure/judge by this operation whether the motor is overloaded or not.

■Accessory

Unit : mm (inch)

I/O cable

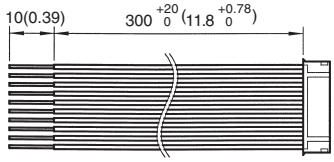

Connection guide

Pin No.	Name	Lead wire color	Lead wire
1	HU OUT	Brown	UL3265 AWG28
2	HV OUT	Red	
3	ALARM OUT	Orange	
4	VR	Yellow	
5	VS	Green	
6	GND	Blue	
7	GND	Purple	
8	F/R IN	Gray	
9	BRAKE	White	
10	RUN	Black	

Power supply cable

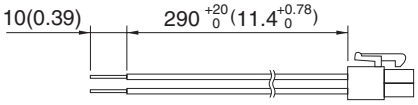

Connection guide

Pin No.	Name	Lead wire color	Lead wire
1	VM	Red	UL1430 AWG22
2	P. GND	Black	

Motor cable

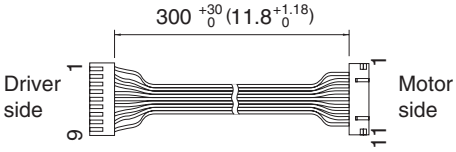

Connection guide

Motor side connector Pin No.	Driver side connector Pin No.	Name	Lead wire color	Lead wire
1	1	Coil U	Brown	UL1007 AWG24
2	–	–	–	–
3	2	Coil V	Red	UL1007 AWG24
4	–	–	–	–
5	3	Coil W	Orange	UL1007 AWG24
6	4	–	Yellow	
7	5	HW	Green	
8	6	HV	Blue	
9	7	HU	Purple	
10	8	GND	Gray	
11	9	12V	White	

■Connector model code

Item	Driver or motor side	Pin head model code on driver or motor	Connector model code on cable		Maker
			Housing	Contact (reel)	
I/O connection	Driver	IL-S-10P-S2L2-EF	IL-S-10S-S2C2-S	IL-S-C2-S-10000	JAE
Power supply connection	Driver	5566-02A1	5557-02R	5556T	MOLEX
Motor connection	Driver	IL-G-9P-S3T2-SA	IL-G-9S-S3C2-SA	IL-G-C2-SC-10000	JAE
	Motor	IL-G-11P-S3L2-SA	IL-G-11S-S3C2-SA	IL-G-C2-SC-10000	

■Motor/Driver/Cable/Rotor cover model code table Unit : mm (inch)

		Motor model code	Driver model code	Power supply cable model code	Motor cable model code	I/O Cable model code	Rotor cover model code
FYD series	Simple driver	FY6S6-D3	FYD66SD3	FED-CNSL03 300 (11.8)	FED-CNML03 300 (11.8)	FYD-CNBL03 300 (11.8)	F-RC630
				FED-CNSL05 500 (19.7)	FED-CNML05 500 (19.7)	FYD-CNBL05 500 (19.7)	
				FED-CNSL10 1000 (39.4)	FED-CNML10 1000 (39.4)	FYD-CNBL10 1000 (39.4)	
		FY6PF6N-D3	FYD66SD3	FED-CNSL03 300 (11.8)	FED-CNML03 300 (11.8)	FYD-CNBL03 300 (11.8)	F-RC630
				FED-CNSL05 500 (19.7)	FED-CNML05 500 (19.7)	FYD-CNBL05 500 (19.7)	
				FED-CNSL10 1000 (39.4)	FED-CNML10 1000 (39.4)	FYD-CNBL10 1000 (39.4)	
		FY8S15-D3	FYD815SD3	FED-CNSL03 300 (11.8)	FED-CNML03 300 (11.8)	FYD-CNBL03 300 (11.8)	F-RC837
				FED-CNSL05 500 (19.7)	FED-CNML05 500 (19.7)	FYD-CNBL05 500 (19.7)	
				FED-CNSL10 1000 (39.4)	FED-CNML10 1000 (39.4)	FYD-CNBL10 1000 (39.4)	
		FY8PF15N-D3	FYD815SD3	FED-CNSL03 300 (11.8)	FED-CNML03 300 (11.8)	FYD-CNBL03 300 (11.8)	F-RC837
				FED-CNSL05 500 (19.7)	FED-CNML05 500 (19.7)	FYD-CNBL05 500 (19.7)	
				FED-CNSL10 1000 (39.4)	FED-CNML10 1000 (39.4)	FYD-CNBL10 1000 (39.4)	

NOTE: The power supply cable and motor cable types for FY series are the same as those for FED series.

High power simple

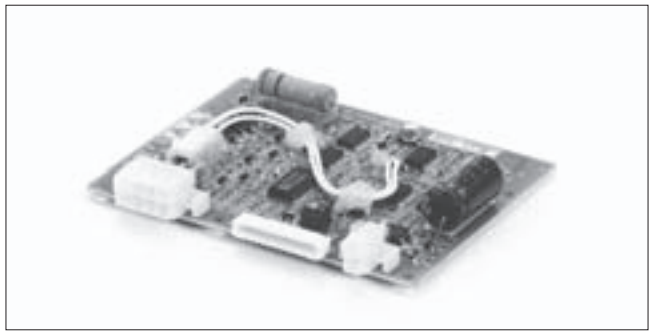

■Specification

Model on motor	plain shaft type	**FY8S25H-D3**	**FY9S40H-D3**
	Pinion shaft type	**FY8PF25H-D3**	**FY9PF40H-D3**
Model on driver		**FYD825HD3**	**FYD940HD3**
Rated voltage	V(DC)	24	24
Rated output	W	25	40
Speed control range	r/min	200~2300	200~2000
Rated torque	mN • m	157	250
	oz • in	22	36
MAX. instantaneous torque 5sec	mN • m	200(1500r/min MAX.)	300(600r/min MAX.)
	oz • in	28(1500r/min MAX.)	43(600r/min MAX.)
Rated speed	r/min	1500	1500
Speed setting method		①Speed setting by external speed setter(Sold separately : model code Q-R10KB)	
		②Speed setting by external voltage supply 0~10V	
Speed setting	(r/min)/V	300±5%	
Speed variation		Against load ±1% 0~rated torque at rated voltage and speed	
		Against voltage ±1% DC24V±10% at rated speed, no load	
		Against temperature ±3% 20±20˚C at rated voltage and speed, no load	
Input and output signal	Input	RUN, BRAKE, F/R IN, ALARM RST H : Open collector L : GND(0~0.8V)	
	Output	ALARM, HU OUT HV OUT Open collector output DC30V MAX. 10mA MAX.	
Speed pulse	Pulse/Rotation	5	5
Current	Rated (Ave.) A	2.3 MAX.	3.4 MAX.
	MAX. (Peak) A	10 MAX.	10 MAX.
Protection		Over load protection When an exceeding torque than rated is applied to motor for more than about 5sec. Stop motor and output "L" from "ALARM".	
Others		Operation temperature 0~40˚C(no condensation) continuous duty. The motor flange surfase temp must be 80˚C MAX. (Ambient temperature 40˚C without heat sink) Motor dielectric strength Withstad for 1min. under AC500V 50Hz (Between case and coil) Motor insulation resistance 10MΩMIN. (Between case and coil DC500V tester)	

Gear ratio	Speed(r/min)		Applicable MAX. Torque for gearheads			
			8H□FBN-100		**9H□FBN-100**	
	at 200r/min	at 1500r/min	mN • m	oz • in	mN • m	oz • in
5	40	300	640	83	1000	140
15	14	100	1900	260	3100	440
25	8	60	2800	400	4600	650
30	6.7	50	3400	490	5600	790
50	4	30	5100	720	8300	1200

- ▭: rotation of gear head output shaft becomes reverse direction of motor's.
- Although the rotation speed range in the high-speed area expands more than that shown in the above table, the allowable torque may decrease. Refer to the torque rotation speed graph.

■Torque-speed/Current (TYP.) characteristics

(FY8S25H-D3/FY8PF25H-D3+FYD825HD3)

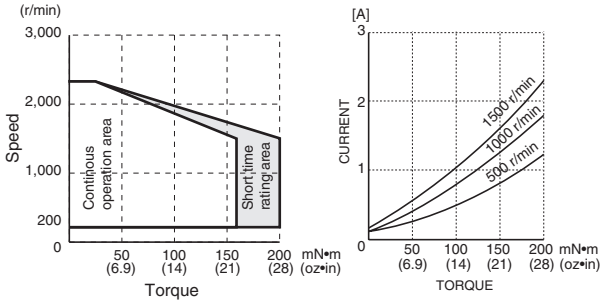

■Feature

(FY9S40H-D3/FY9PF40H-D3+FYD940HD3)

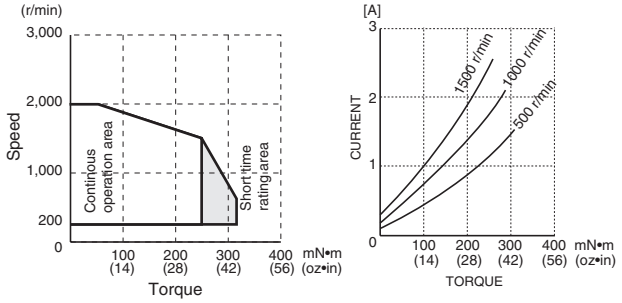

■Motor outlines(Plain shaft type) Unit : mm (inch)

FY8S25H-D3

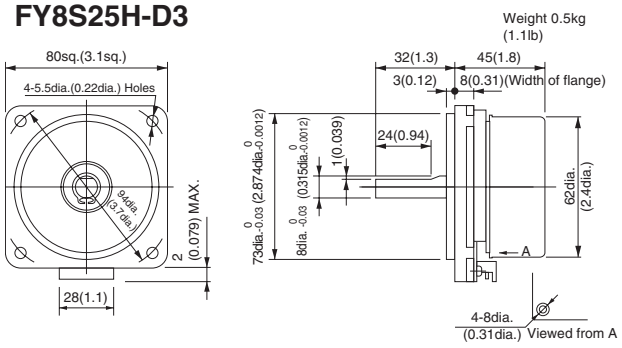

FY9S40H-D3

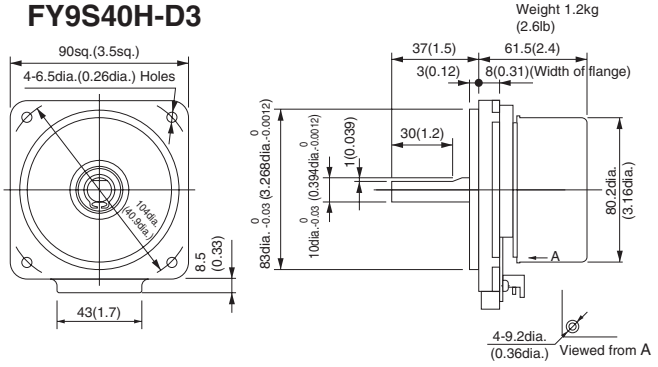

■Motor (Pinion shaft type)+ Gear head outlines Unit : mm (inch)

FY8PF25H-D3+ 8H□FBN-100

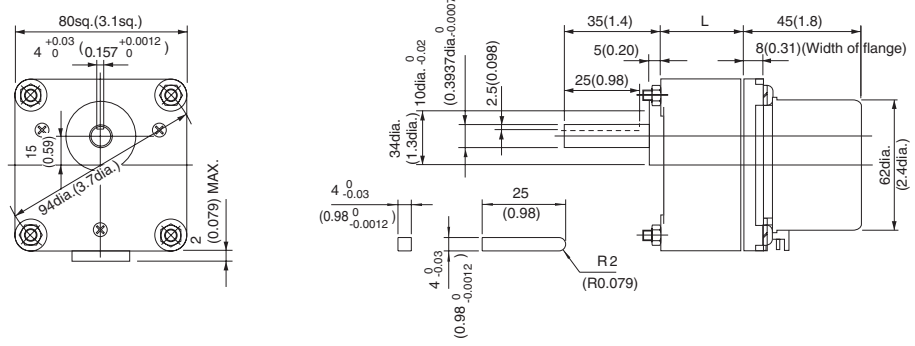

L(Gear head length)•Weight•Screw(Accessory)

Gear ratio	Lmm(in.)	Weight Kg(lb)	Screw
1/5~1/15	30(1.2)	0.5(1.1)	M5X50(2)
1/25~1/50	40(1.6)	0.6(1.3)	M5X60(2.4)

FY9PF40H-D3+ 9H□FBN-100

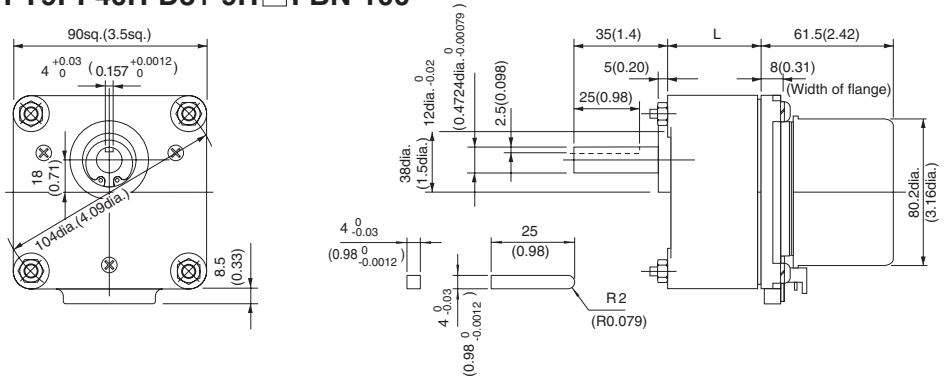

L(Gear head length)•Weight•Screw(Accessory)

Gear ratio	Lmm(in.)	Weight Kg(lb)	Screw
1/5~1/15	42(1.7)	0.8(1.8)	M6X60(3.1)
1/25~1/50	60(2.4)	0.9(2.0)	M6X80(4.1)

NOTE

For prevention of oil leaking, combination use a packing (rubber) sold separately between gear head and motor.

Model on packing(rubber)
8H□FBN : H8packing(rubber)
9H□FBN : H9packing(rubber)

■Input & output terminals and wiring diagram

Item	Pin No.	Read Wire Color	Symbol	Input or Output	Function	Standard • Condition
Power supply	1	Red	VM	Input	Power supply positive for driver	DV24V±10%
	2	Black	P.GND	–	Power supply GND for driver	
I/O	1	Brown	HU OUT	Output	5 Pulse/Revolution ※1	H : Open collector DC30V MAX. L : 0~0.8V 10mA MAX.
	2	Red	HV OUT	Output		
	3	Orange	ALARM OUT	Output	H : Normal operation L : Protective function operates	
	4	Yellow	VR	Output	Power supply positive for external speed setter	
	5	Green	VS	Input	Speed setting signal positive	0~10V
	6	Blue	GND	–	Speed setting signal GND	
	7	Puple	GND	–	GND for I/O Signal	
	8	Gray	F/R IN	Input	H : CCW L : CW (Viewed from motor output shaft side)	H : Open collector L : 0~0.8V X.
	9	White	BRAKE ※2	Input	H : Brake releases L : Brake operates	
	10	Black	RUN	Input	H : Motor stops L : Motor rotates	
	11	Brown	ALARM RST ※3	Input	Normal operation The alarm is canceled in 1 second or more of input.	
	12	Red	N.C.	–	Not used	Must be operated in the open state.

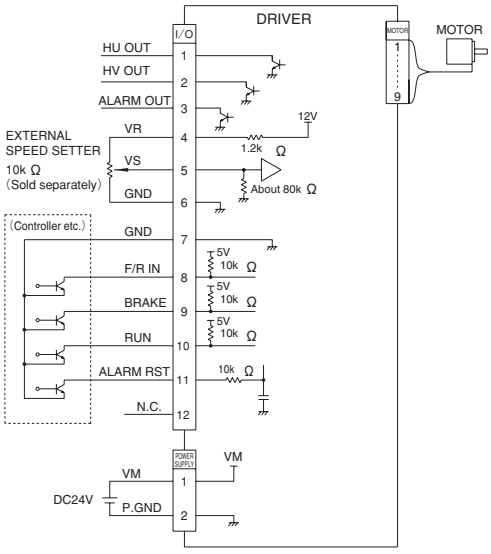

※1 "HU OUT" signal and "HV OUT" signal aer shown below.

Motor rotation (viewed from motor output shaft end)

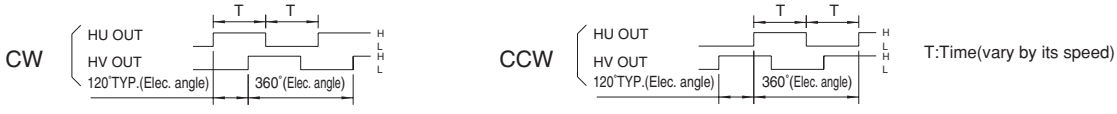

※ 2 ・Brake specification: Short brake between terminals
・"BRAKE has priority over "RUN".
・During rotation direction switching operation, "BRAKE" terminal voltage may reduce due to internal processing.

※ 3 In case of "L", the overload protection function is canceled. If overload operation is performed in this state, the motor may burn out.

■Control sequence

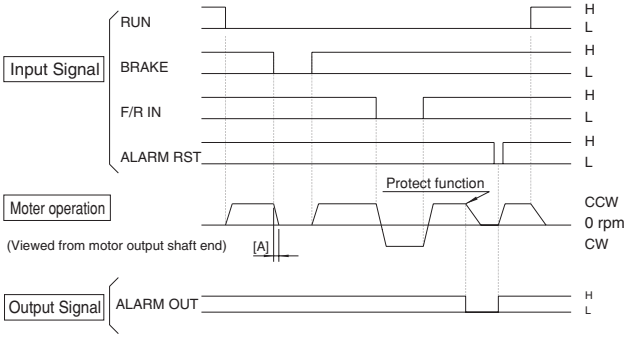

［Note for brake operation］
Perform brake operation (area [A] above) within the speed limit range.
Different operation from the above may cause fire or failure.

■Protection

Item	Protection		Alarm Release
	Setting	Action	
Overload Protection	When the load exceeding rated torque is applied to motor for more than about 5 sec.	Motor is stopped, and "ALARM" outputs "L".	Cool down the driver fully, and disconnect power supply for more than 1 minute until "ALARM OUT" changes to "H" .

It cannot be determined that the load is more or less than the rating by whether or not this function works. Make sure to check that the load is less than the rating before use. When the overload protection function is canceled ("ALARM RST" is in the "L" state) and temperature rises rapidly due to motor restraint, the motor may burn out. Make sure to set "ALARM RST" to "H" before operating the motor.

■Speed setting

Item	Setting Method
Speed setting by external speed setter (sold separately)	Connect as shown in Fig.1 and set by external speed setter. Use variable resistor 10[KΩ] as external speed setter.
Speed setting by external voltage supply	Connect as shown in Fig.2 and set speed by external voltage supply.

By these mothed, it is possible to set a speed at outside of Speed rauge. But it must be out of our product warranty.

Fig.1 Speed setting by external speed setter

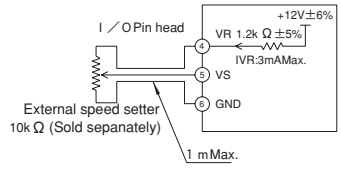

Fig.2 Speed setting by external voltage supply

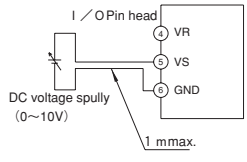

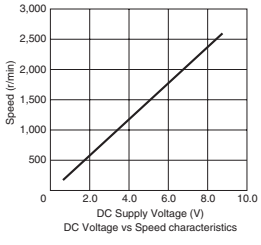

DC Voltage vs Speed characteristics

■Driver outline Unit : mm (inch)

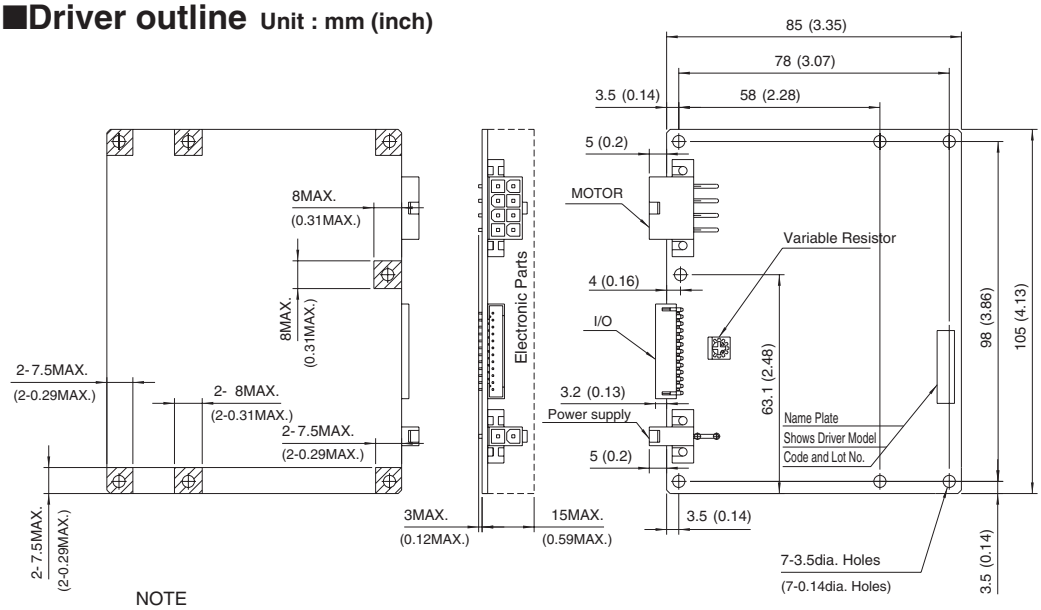

NOTE
1 The adjustable part of variable resistor should not be touched.
2 ▨ parts show the allowable limits of metal parts for driver mounting.Both surface are same limit.

■Accessory Unit : mm (inch)

POWER SUPPLY CABLE

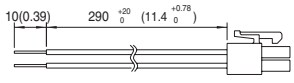

I/O CABLE

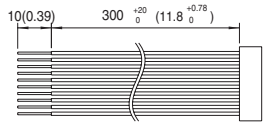

Motor CABLE

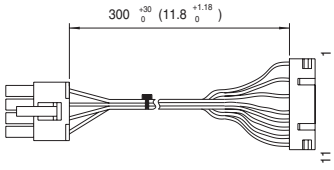

Connection guide (Driver side)

Pin No.	Name	Lead wire color	Note
1	GND	Gray	–
2	VH(12V)	White	–
3	Coil U	Brawn	–
4	Coil V	Red	–
5	HU	Purple	Open collector output
6	HV	Blue	Open collector output
7	HW	Green	Open collector output
8	Coil W	Orange	–

Connection guide (Motor side)

Pin No.	Name	Note
1	Coil U	–
2	–	–
3	Coil V	–
4	–	–
5	Coil W	–
6	–	–
7	HW	Open collector output
8	HV	Open collector output
9	HU	Open collector output
10	GND	–
11	12V	–

■Connector model code

Item	Driver or motor side	Pin head model code on driver or motor	Connector model code on cable		Maker
			Housing	Contact (reel)	
I/O connection	Driver	53325-1210	51090-1200	50212-8000	MOLEX
Power supply connection	Driver	5569-02A1	5557-02R	5556T	
Motor connection	Driver	5569-08A1	5557-08R	5556T2	
	Motor	IL-G-11P-S3L2-SA	IL-G-11S-S3C2-SA	IL-G-C2-SC-10000	JAE

■Rotor cover (Sold separately)

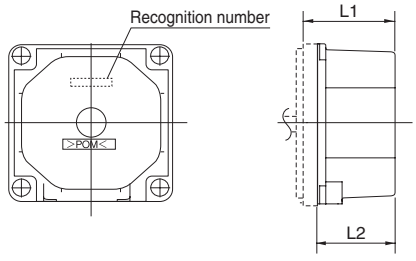

Model on rotor cover	L1mm (in)	L2mm (in)	Recognition number	Accessory washer nominal diameter	Adapting motor		
F-RC844	50 (2.0)	43.5 (1.71)	AD09904	M5	25W	Plain shaft type	FY8S25H-D3
						Pinion shaft type	FY8PF25H-D3
F-RC961	67.5 (2.66)	61 (2.40)	AD09903	M6	40W	Plain shaft type	FY9S40H-D3
						Pinion shaft type	FY9PF40H-D3

■Motor/Driver/Cable/Rotor cover model code table Unit : mm (inch)

		Motor model code	Driver model code	Power supply cable model code	Motor cable model code	I/O Cable model code	Rotor cover model code
FYD series	High power Simple driver	FY8S25H-D3	FYD825HD3	FED-CNSL03 300 (11.8)	FYD-CNDL03 300 (11.8)	FYD-CNHL03 300 (11.8)	F-RC844
				FED-CNSL05 500 (19.7)	FYD-CNDL05 500 (19.7)	FYD-CNHL05 500 (19.7)	
				FED-CNSL10 1000 (39.4)	FYD-CNDL10 1000 (39.4)	FYD-CNHL10 1000 (39.4)	
		FY8PF25H-D3	FYD825HD3	FED-CNSL03 300 (11.8)	FYD-CNDL03 300 (11.8)	FYD-CNHL03 300 (11.8)	F-RC844
				FED-CNSL05 500 (19.7)	FYD-CNDL05 500 (19.7)	FYD-CNHL05 500 (19.7)	
				FED-CNSL10 1000 (39.4)	FYD-CNDL10 1000 (39.4)	FYD-CNHL10 1000 (39.4)	
		FY9S40H-D3	FYD940HD3	FED-CNSL03 300 (11.8)	FYD-CNDL03 300 (11.8)	FYD-CNHL03 300 (11.8)	F-RC961
				FED-CNSL05 500 (19.7)	FYD-CNDL05 500 (19.7)	FYD-CNHL05 500 (19.7)	
				FED-CNSL10 1000 (39.4)	FYD-CNDL10 1000 (39.4)	FYD-CNHL10 1000 (39.4)	
		FY9PF40H-D3	FYD940HD3	FED-CNSL03 300 (11.8)	FYD-CNDL03 300 (11.8)	FYD-CNHL03 300 (11.8)	F-RC961
				FED-CNSL05 500 (19.7)	FYD-CNDL05 500 (19.7)	FYD-CNHL05 500 (19.7)	
				FED-CNSL10 1000 (39.4)	FYD-CNDL10 1000 (39.4)	FYD-CNHL10 1000 (39.4)	

NOTE)Power Supply Cable types for FYD series are the same as FED series, because they are used in commonly.